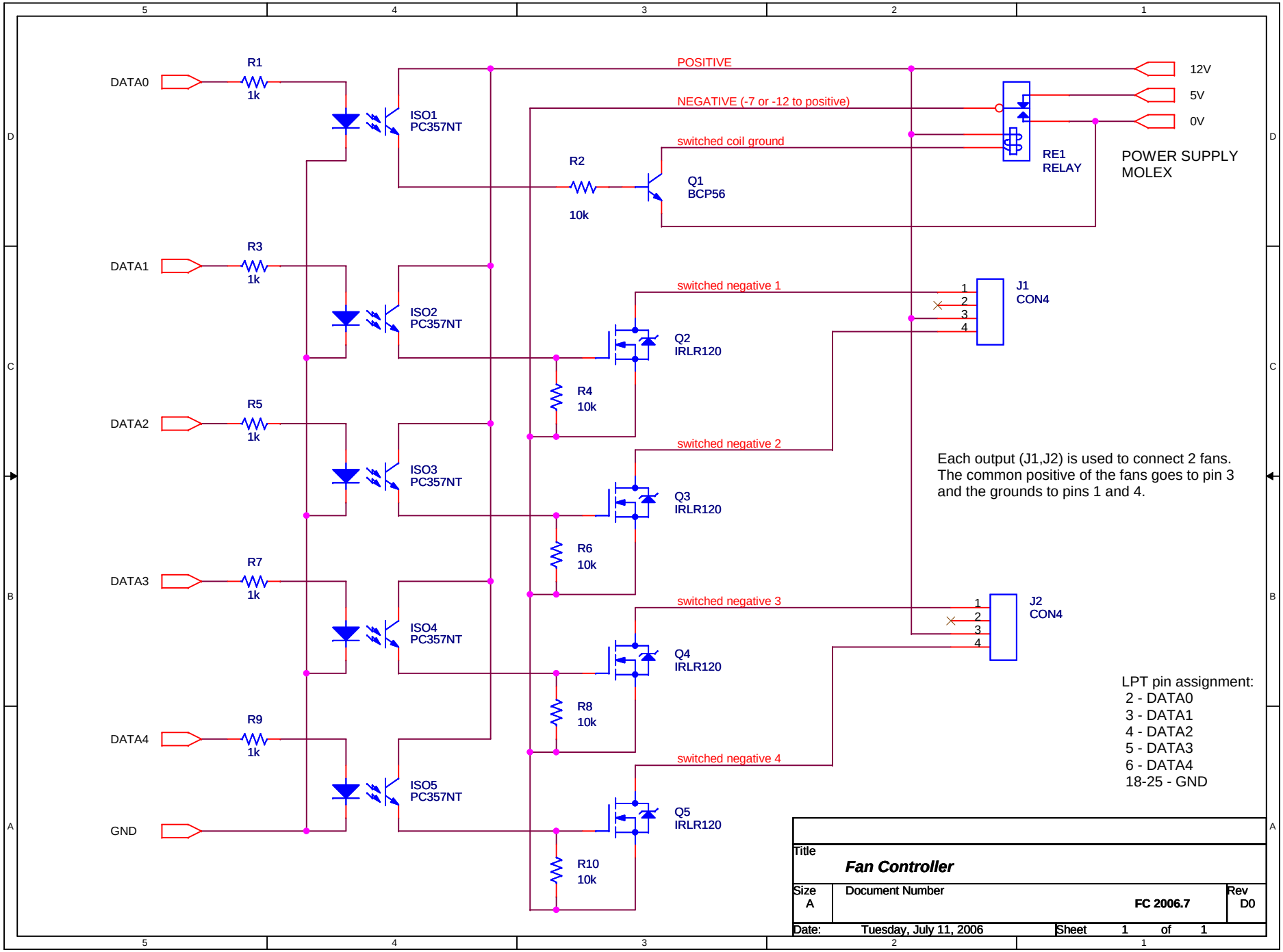
DATA0
R1
1k
ISO1
PC357NT
DATA1
R3
1k
ISO2
PC357NT
DATA2
R5
1k
ISO3
PC357NT
DATA3
R7
1k
ISO4
PC357NT
DATA4
R9
1k
ISO5
PC357NT
GND
POSITIVE
NEGATIVE (-7 or -12 to positive)
switched coil ground
R2
10k
Q1
BCP56
12V
5V
0V
RE1
RELAY
POWER SUPPLY
MOLEX
switched negative 1
J1
CON4
Q2
IRLR120
R4
10k
switched negative 2
Q3
IRLR120
R6
10k
switched negative 3
J2
CON4
Q4
IRLR120
R8
10k
switched negative 4
Q5
IRLR120
R10
10k
Each output (J1,J2) is used to connect 2 fans.
The common positive of the fans goes to pin 3
and the grounds to pins 1 and 4.
LPT pin assignment:
2 - DATA0
3 - DATA1
4 - DATA2
5 - DATA3
6 - DATA4
18-25 - GND
Title
Fan Controller
Size
A
Document Number
FC 2006.7
Rev
D0
Date:
Tuesday, July 11, 2006
Sheet
1
of
1